# M74HC125

## QUAD BUS BUFFER (3-STATE)

- HIGH SPEED:
  $t_{PD}$ = 8ns (TYP.) at $V_{CC}$ = 6V
- LOW POWER DISSIPATION:
  $I_{CC}$ = 4µA(MAX.) at $T_A$=25°C
- HIGH NOISE IMMUNITY:
  $V_{NIH} = V_{NIL}$ = 28 % $V_{CC}$ (MIN.)
- SYMMETRICAL OUTPUT IMPEDANCE:
  $|I_{OH}| = I_{OL}$ = 6mA (MIN)
- BALANCED PROPAGATION DELAYS:
  $t_{PLH} \cong t_{PHL}$
- WIDE OPERATING VOLTAGE RANGE:
  $V_{CC}$ (OPR) = 2V to 6V
- PIN AND FUNCTION COMPATIBLE WITH 74 SERIES 125

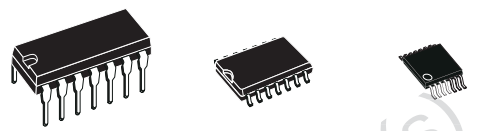

DIP SOP TSSOP

**ORDER CODES**

| PACKAGE | TUBE | T & R |
|---|---|---|
| DIP | M74HC125B1R | |
| SOP | M74HC125M1R | M74HC125RM13TR |
| TSSOP | | M74HC125TTR |

**DESCRIPTION**

The M74HC125 is an high speed CMOS QUAD BUFFER (3-STATE) fabricated with silicon gate $C^2MOS$ technology.
The device requires the 3-STATE control input $\overline{G}$ to be set high to place the output into the high impedance state.

All inputs are equipped with protection circuits against static discharge and transient excess voltage.

Obsolete Product(s) - Obsolete Product(s)

**PIN CONNECTION AND IEC LOGIC SYMBOLS**

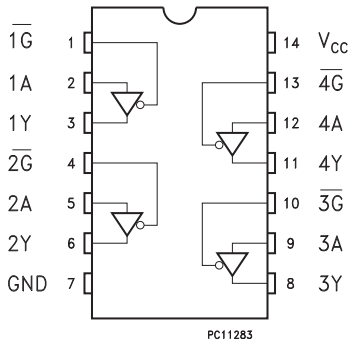


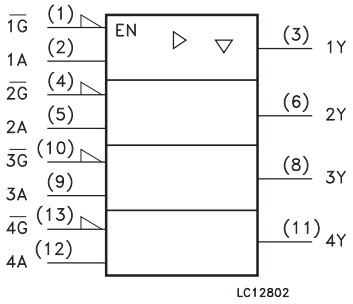

## INPUT AND OUTPUT EQUIVALENT CIRCUIT

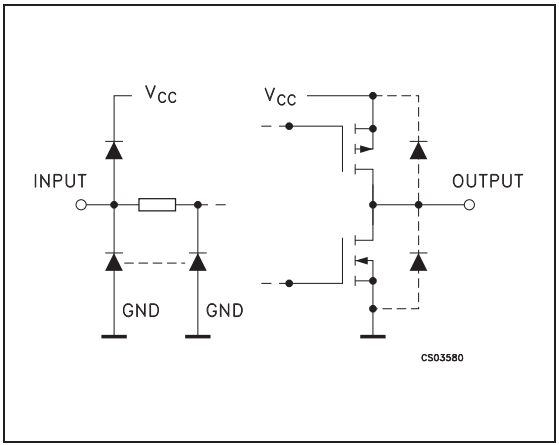


## PIN DESCRIPTION

| PIN No | SYMBOL | NAME AND FUNCTION |
|---|---|---|
| 1, 4, 10, 13 | $\overline{1G}$ TO $\overline{4G}$ | Output Enable Input |
| 2, 5, 9, 12 | 1A TO 4A | Data Inputs |
| 3, 6, 8, 11 | 1Y TO 4Y | Data Outputs |
| 7 | GND | Ground (0V) |
| 14 | $V_{CC}$ | Positive Supply Voltage |

## TRUTH TABLE

| A | $\overline{G}$ | Y |
|---|---|---|
| X | H | Z |
| L | L | L |
| H | L | H |

## ABSOLUTE MAXIMUM RATINGS

| Symbol | Parameter | Value | Unit |
|---|---|---|---|
| $V_{CC}$ | Supply Voltage | -0.5 to +7 | V |
| $V_I$ | DC Input Voltage | -0.5 to $V_{CC}$ + 0.5 | V |
| $V_O$ | DC Output Voltage | -0.5 to $V_{CC}$ + 0.5 | V |
| $I_{IK}$ | DC Input Diode Current | ± 20 | mA |
| $I_{OK}$ | DC Output Diode Current | ± 20 | mA |
| $I_O$ | DC Output Current | ± 35 | mA |
| $I_{CC}$ or $I_{GND}$ | DC $V_{CC}$ or Ground Current | ± 70 | mA |
| $P_D$ | Power Dissipation | 500(*) | mW |
| $T_{stg}$ | Storage Temperature | -65 to +150 | °C |
| $T_L$ | Lead Temperature (10 sec) | 300 | °C |

Absolute Maximum Ratings are those values beyond which damage to the device may occur. Functional operation under these conditions is not implied
(*) 500mW at 65 °C; derate to 300mW by 10mW/°C from 65°C to 85°C

## RECOMMENDED OPERATING CONDITIONS

| Symbol | Parameter | | Value | Unit |
|---|---|---|---|---|
| $V_{CC}$ | Supply Voltage | | 2 to 6 | V |
| $V_I$ | Input Voltage | | 0 to $V_{CC}$ | V |
| $V_O$ | Output Voltage | | 0 to $V_{CC}$ | V |
| $T_{op}$ | Operating Temperature | | -55 to 125 | °C |
| $t_r$, $t_f$ | Input Rise and Fall Time | $V_{CC}$ = 2.0V | 0 to 1000 | ns |
| | | $V_{CC}$ = 4.5V | 0 to 500 | ns |
| | | $V_{CC}$ = 6.0V | 0 to 400 | ns |

Obsolete Product(s) - Obsolete Product(s)

## DC SPECIFICATIONS

| Symbol | Parameter | Test Condition | | Value | | | | | | | Unit |
|---|---|---|---|---|---|---|---|---|---|---|---|
| | | $V_{CC}$ (V) | | $T_A$ = 25°C | | | -40 to 85°C | | -55 to 125°C | | |
| | | | | Min. | Typ. | Max. | Min. | Max. | Min. | Max. | |
| $V_{IH}$ | High Level Input Voltage | 2.0 | | 1.5 | | | 1.5 | | 1.5 | | V |
| | | 4.5 | | 3.15 | | | 3.15 | | 3.15 | | |
| | | 6.0 | | 4.2 | | | 4.2 | | 4.2 | | |
| $V_{IL}$ | Low Level Input Voltage | 2.0 | | | | 0.5 | | 0.5 | | 0.5 | V |
| | | 4.5 | | | | 1.35 | | 1.35 | | 1.35 | |
| | | 6.0 | | | | 1.8 | | 1.8 | | 1.8 | |
| $V_{OH}$ | High Level Output Voltage | 2.0 | $I_O$=-20 µA | 1.9 | 2.0 | | 1.9 | | 1.9 | | V |
| | | 4.5 | $I_O$=-20 µA | 4.4 | 4.5 | | 4.4 | | 4.4 | | |
| | | 6.0 | $I_O$=-20 µA | 5.9 | 6.0 | | 5.9 | | 5.9 | | |
| | | 4.5 | $I_O$=-6.0 mA | 4.18 | 4.31 | | 4.13 | | 4.10 | | |
| | | 6.0 | $I_O$=-7.8 mA | 5.68 | 5.8 | | 5.63 | | 5.60 | | |
| $V_{OL}$ | Low Level Output Voltage | 2.0 | $I_O$=20 µA | | 0.0 | 0.1 | | 0.1 | | 0.1 | V |
| | | 4.5 | $I_O$=20 µA | | 0.0 | 0.1 | | 0.1 | | 0.1 | |
| | | 6.0 | $I_O$=20 µA | | 0.0 | 0.1 | | 0.1 | | 0.1 | |
| | | 4.5 | $I_O$=6.0 mA | | 0.17 | 0.26 | | 0.33 | | 0.40 | |
| | | 6.0 | $I_O$=7.8 mA | | 0.18 | 0.26 | | 0.33 | | 0.40 | |
| $I_I$ | Input Leakage Current | 6.0 | $V_I$ = $V_{CC}$ or GND | | | ± 0.1 | | ± 1 | | ± 1 | µA |
| $I_{OZ}$ | High Impedance Output Leakage Current | 6.0 | $V_I$ = $V_{IH}$ or $V_{IL}$<br>$V_O$ = $V_{CC}$ or GND | | | ± 0.5 | | ± 5 | | ± 10 | µA |
| $I_{CC}$ | Quiescent Supply Current | 6.0 | $V_I$ = $V_{CC}$ or GND | | | 4 | | 40 | | 80 | µA |

Obsolete Product(s) - Obsolete Product(s)

## AC ELECTRICAL CHARACTERISTICS (Input $t_r = t_f = 6ns$)

| Symbol | Parameter | Test Condition | | | Value | | | | | | | Unit |
|---|---|---|---|---|---|---|---|---|---|---|---|---|
| | | $V_{CC}$ (V) | $C_L$ (pF) | | $T_A = 25°C$ | | | -40 to 85°C | | -55 to 125°C | | |
| | | | | | Min. | Typ. | Max. | Min. | Max. | Min. | Max. | |
| $t_{TLH}$ $t_{THL}$ | Output Transition Time | 2.0 | 50 | | | 20 | 60 | | 75 | | 90 | ns |
| | | 4.5 | | | | 6 | 12 | | 15 | | 18 | |
| | | 6.0 | | | | 5 | 10 | | 13 | | 15 | |
| $t_{PLH}$ $t_{PHL}$ | Propagation Delay Time | 2.0 | 50 | | | 36 | 75 | | 95 | | 110 | ns |
| | | 4.5 | | | | 9 | 15 | | 19 | | 22 | |
| | | 6.0 | | | | 8 | 13 | | 16 | | 19 | |
| | | 2.0 | 150 | | | 52 | 105 | | 130 | | 160 | ns |
| | | 4.5 | | | | 13 | 21 | | 26 | | 32 | |
| | | 6.0 | | | | 11 | 18 | | 22 | | 27 | |
| $t_{PZL}$ $t_{PZH}$ | High Impedance Output Enable Time | 2.0 | 50 | $R_L = 1 K\Omega$ | | 36 | 75 | | 95 | | 110 | ns |
| | | 4.5 | | | | 9 | 15 | | 19 | | 22 | |
| | | 6.0 | | | | 8 | 13 | | 16 | | 19 | |
| | | 2.0 | 150 | $R_L = 1 K\Omega$ | | 52 | 105 | | 130 | | 160 | ns |
| | | 4.5 | | | | 13 | 21 | | 26 | | 32 | |
| | | 6.0 | | | | 11 | 18 | | 22 | | 27 | |
| $t_{PLZ}$ $t_{PHZ}$ | High Impedance Output Disable Time | 2.0 | 50 | $R_L = 1 K\Omega$ | | 48 | 80 | | 100 | | 120 | ns |
| | | 4.5 | | | | 12 | 16 | | 20 | | 24 | |
| | | 6.0 | | | | 10 | 14 | | 17 | | 20 | |

## CAPACITIVE CHARACTERISTICS

| Symbol | Parameter | Test Condition | | Value | | | | | | | Unit |
|---|---|---|---|---|---|---|---|---|---|---|---|
| | | $V_{CC}$ (V) | | $T_A = 25°C$ | | | -40 to 85°C | | -55 to 125°C | | |
| | | | | Min. | Typ. | Max. | Min. | Max. | Min. | Max. | |
| $C_{IN}$ | Input Capacitance | 5.0 | | | 5 | 10 | | 10 | | 10 | pF |
| $C_{PD}$ | Power Dissipation Capacitance (note 1) | 5.0 | | | 35 | | | | | | pF |

1) $C_{PD}$ is defined as the value of the IC's internal equivalent capacitance which is calculated from the operating current consumption without load. (Refer to Test Circuit). Average operating current can be obtained by the following equation. $I_{CC(opr)} = C_{PD} \times V_{CC} \times f_{IN} + I_{CC}/4$ (per buffer)

Obsolete Product(s) - Obsolete Product(s)

## TEST CIRCUIT

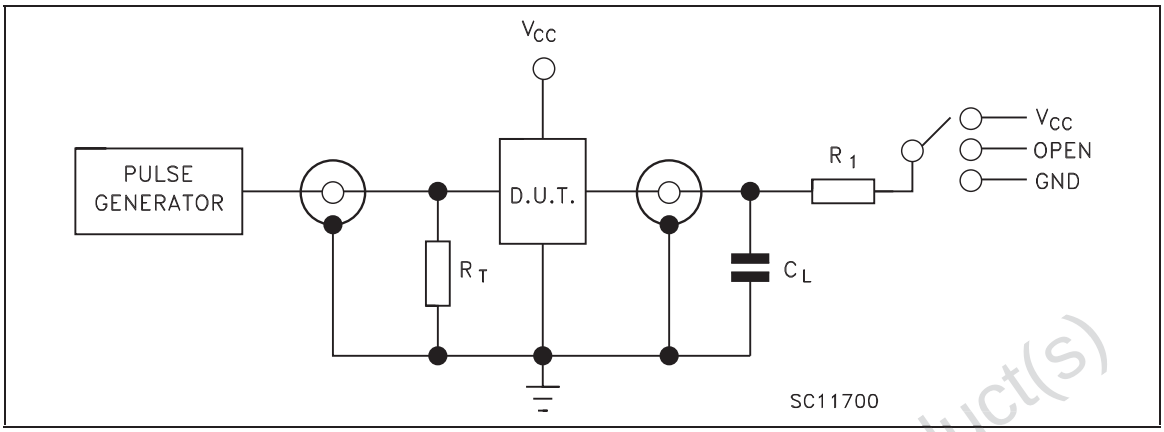


| TEST | SWITCH |
|---|---|
| $t_{PLH}$, $t_{PHL}$ | Open |
| $t_{PZL}$, $t_{PLZ}$ | $V_{CC}$ |
| $t_{PZH}$, $t_{PHZ}$ | GND |

$C_L$ = 50pF/150pF or equivalent (includes jig and probe capacitance)
$R_1$ = 1KΩ or equivalent
$R_T$ = $Z_{OUT}$ of pulse generator (typically 50Ω))

**WAVEFORM 1 : PROPAGATION DELAY TIMES** (f=1MHz; 50% duty cycle)

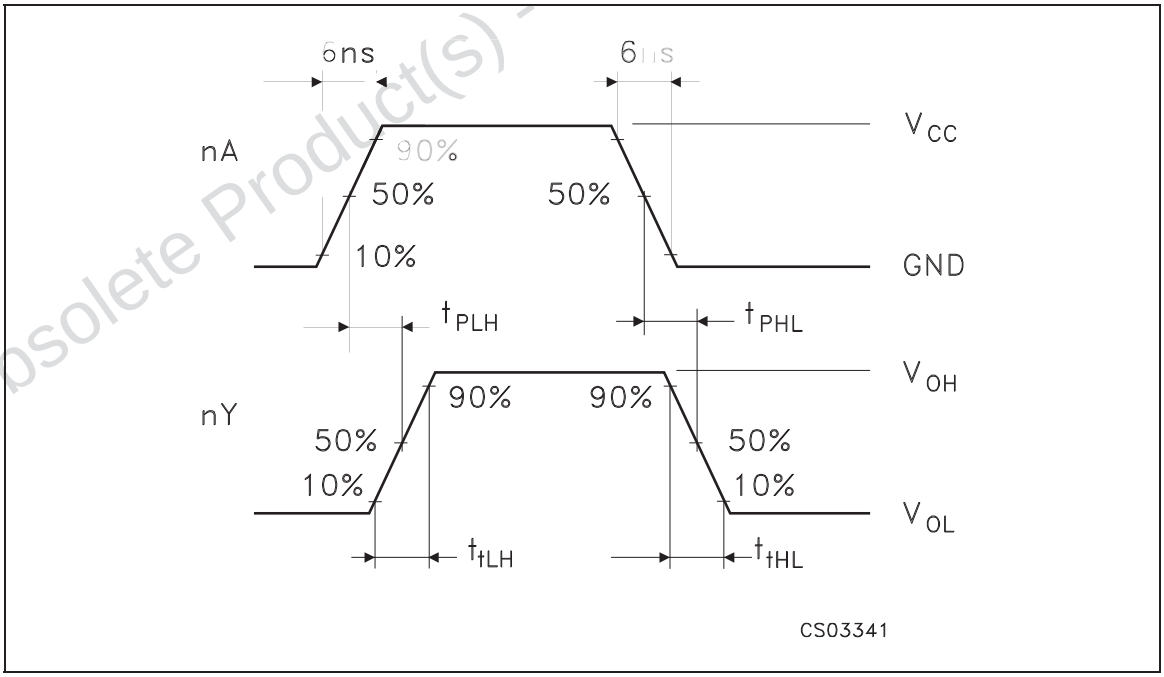


Obsolete Product(s) - Obsolete Product(s)

**WAVEFORM 2 : OUTPUT ENABLE AND DISABLE TIMES** (f=1MHz; 50% duty cycle)

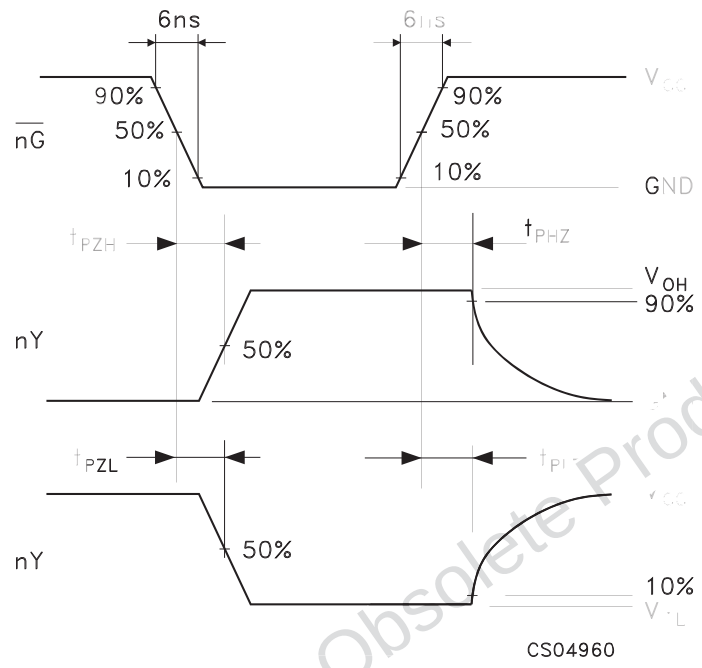


Obsolete Product(s) - Obsolete Product(s)

## Plastic DIP-14 MECHANICAL DATA

| DIM. | mm. | | | inch | | |
|---|---|---|---|---|---|---|
| | MIN. | TYP | MAX. | MIN. | TYP. | MAX. |
| a1 | 0.51 | | | 0.020 | | |
| B | 1.39 | | 1.65 | 0.055 | | 0.065 |
| b | | 0.5 | | | 0.020 | |
| b1 | | 0.25 | | | 0.010 | |
| D | | | 20 | | | 0.787 |
| E | | 8.5 | | | 0.335 | |
| e | | 2.54 | | | 0.100 | |
| e3 | | 15.24 | | | 0.600 | |
| F | | | 7.1 | | | 0.280 |
| I | | | 5.1 | | | 0.201 |
| L | | 3.3 | | | 0.130 | |
| Z | 1.27 | | 2.54 | 0.050 | | 0.100 |

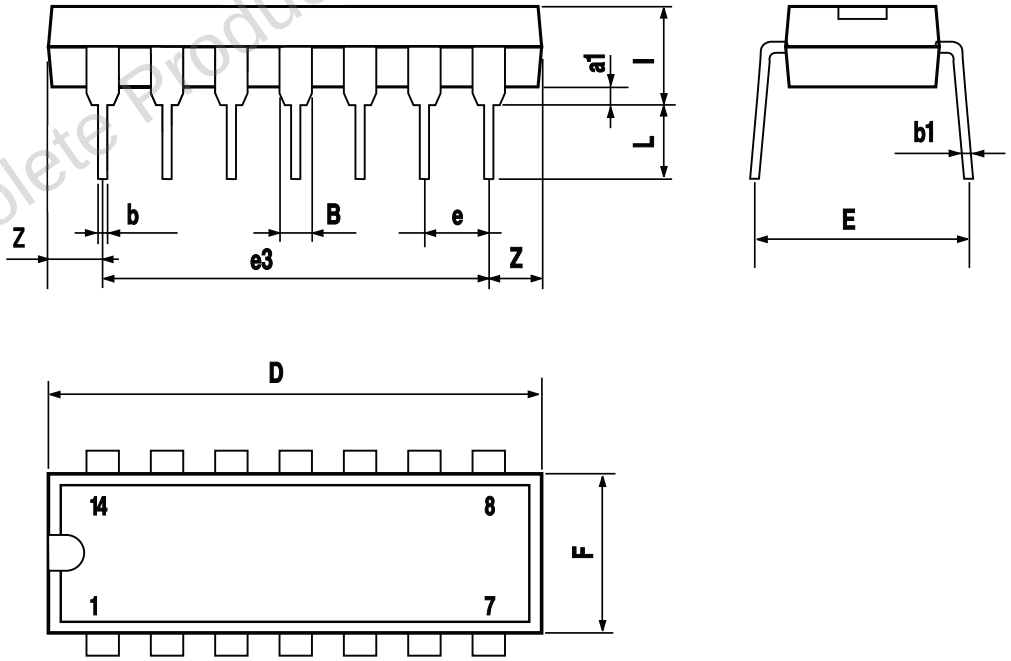


P001A

Obsolete Product(s) - Obsolete Product(s)

## SO-14 MECHANICAL DATA

| DIM. | mm. | | | inch | | |
|---|---|---|---|---|---|---|
| | MIN. | TYP | MAX. | MIN. | TYP. | MAX. |
| A | | | 1.75 | | | 0.068 |
| a1 | 0.1 | | 0.2 | 0.003 | | 0.007 |
| a2 | | | 1.65 | | | 0.064 |
| b | 0.35 | | 0.46 | 0.013 | | 0.018 |
| b1 | 0.19 | | 0.25 | 0.007 | | 0.010 |
| C | | 0.5 | | | 0.019 | |
| c1 | 45° (typ.) | | | | | |
| D | 8.55 | | 8.75 | 0.336 | | 0.344 |
| E | 5.8 | | 6.2 | 0.228 | | 0.244 |
| e | | 1.27 | | | 0.050 | |
| e3 | | 7.62 | | | 0.300 | |
| F | 3.8 | | 4.0 | 0.149 | | 0.157 |
| G | 4.6 | | 5.3 | 0.181 | | 0.208 |
| L | 0.5 | | 1.27 | 0.019 | | 0.050 |
| M | | | 0.68 | | | 0.026 |
| S | 8° (max.) | | | | | |

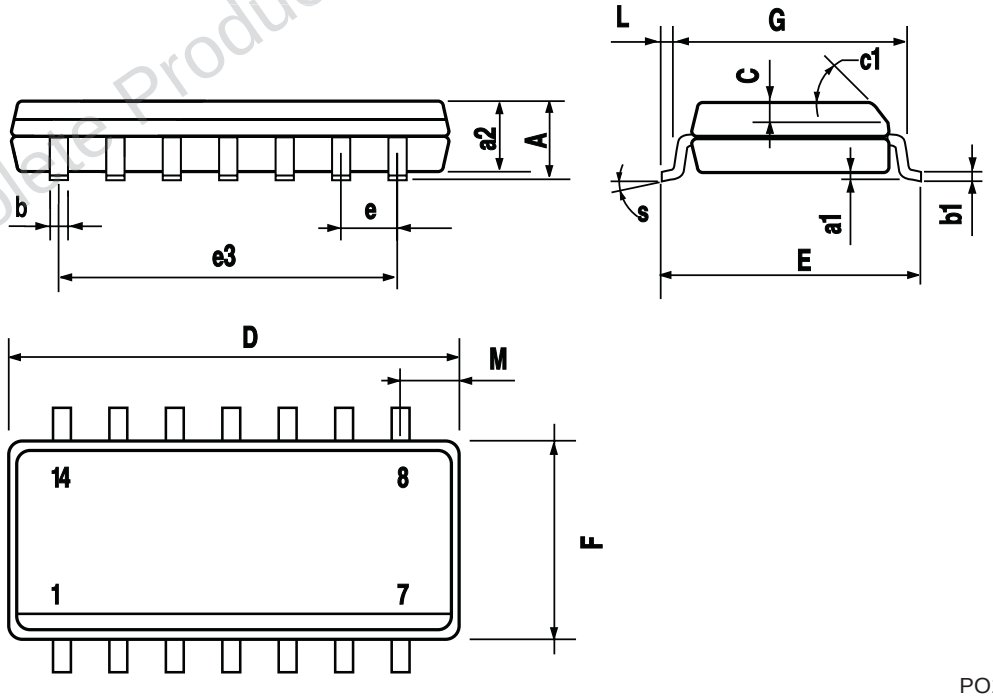


PO13G

Obsolete Product(s) - Obsolete Product(s)

## TSSOP14 MECHANICAL DATA

| DIM. | mm. | | | inch | | |
|---|---|---|---|---|---|---|
| | MIN. | TYP | MAX. | MIN. | TYP. | MAX. |
| A | | | 1.2 | | | 0.047 |
| A1 | 0.05 | | 0.15 | 0.002 | 0.004 | 0.006 |
| A2 | 0.8 | 1 | 1.05 | 0.031 | 0.039 | 0.041 |
| b | 0.19 | | 0.30 | 0.007 | | 0.012 |
| c | 0.09 | | 0.20 | 0.004 | | 0.0089 |
| D | 4.9 | 5 | 5.1 | 0.193 | 0.197 | 0.201 |
| E | 6.2 | 6.4 | 6.6 | 0.244 | 0.252 | 0.260 |
| E1 | 4.3 | 4.4 | 4.48 | 0.169 | 0.173 | 0.176 |
| e | | 0.65 BSC | | | 0.0256 BSC | |
| K | 0° | | 8° | 0° | | 8° |
| L | 0.45 | 0.60 | 0.75 | 0.018 | 0.024 | 0.030 |

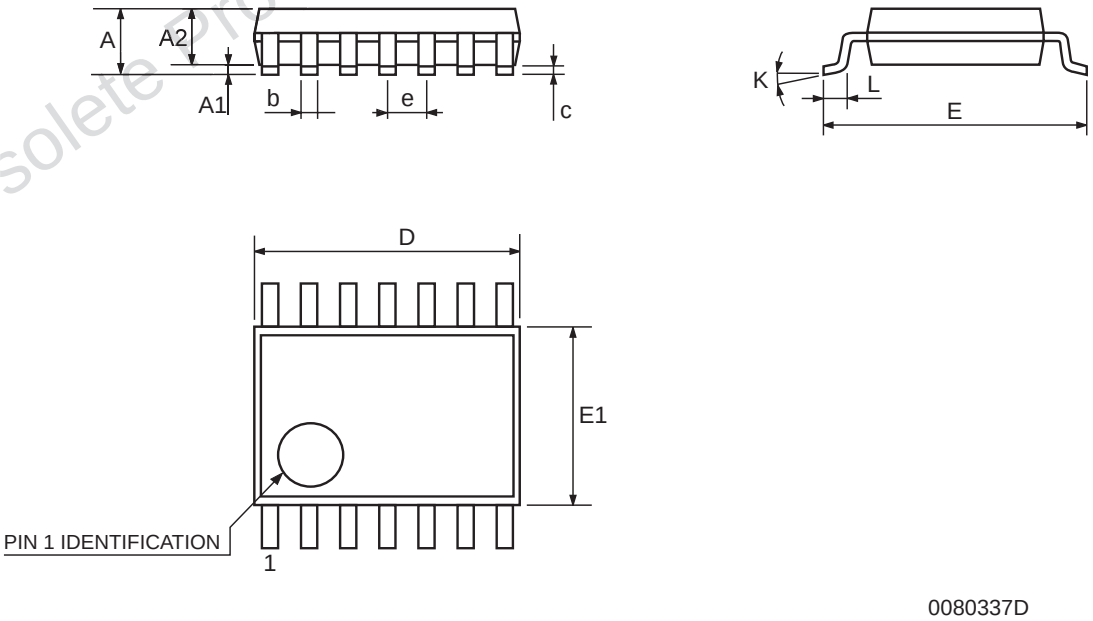


Obsolete Product(s) - Obsolete Product(s)

Obsolete Product(s) - Obsolete Product(s)

**Information furnished is believed to be accurate and reliable. However, STMicroelectronics assumes no responsibility for the consequences of use of such information nor for any infringement of patents or other rights of third parties which may result from its use. No license is granted by implication or otherwise under any patent or patent rights of STMicroelectronics. Specifications mentioned in this publication are subject to change without notice. This publication supersedes and replaces all information previously supplied. STMicroelectronics products are not authorized for use as critical components in life support devices or systems without express written approval of STMicroelectronics.**

**© The ST logo is a registered trademark of STMicroelectronics**

**© 2001 STMicroelectronics - Printed in Italy - All Rights Reserved**
**STMicroelectronics GROUP OF COMPANIES**
Australia - Brazil - China - Finland - France - Germany - Hong Kong - India - Italy - Japan - Malaysia - Malta - Morocco
Singapore - Spain - Sweden - Switzerland - United Kingdom
**© http://www.st.com**